List: PSV10-3A-1-Feb 2016

DESCRIPTION

A screw-in , cartridge-style , direct-acting , spool-type , hydraulic sequence valve with internal pilot and internal spring chamber drain , design to direct flow to a secondary circuit once a pre-determined pressure level is attained in the primary circuit.

OPERATION

In its steady state , the PSV10-3A blocks flow at 1 , while allowing flow to pass from 2 to 3.
On attainment of a pre-determined pressure at 1 , the cartridge shifts to open 1 to 2.

SYMBOL

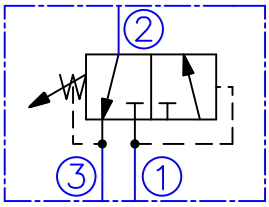

PERFORMANCE

Cartridge only

32cSt oil at 40°C

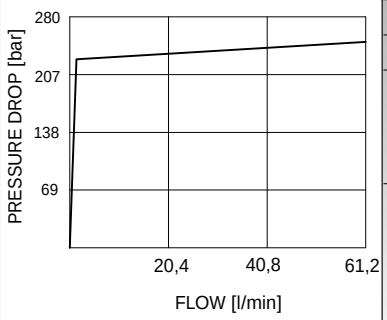

DIMENSIONS

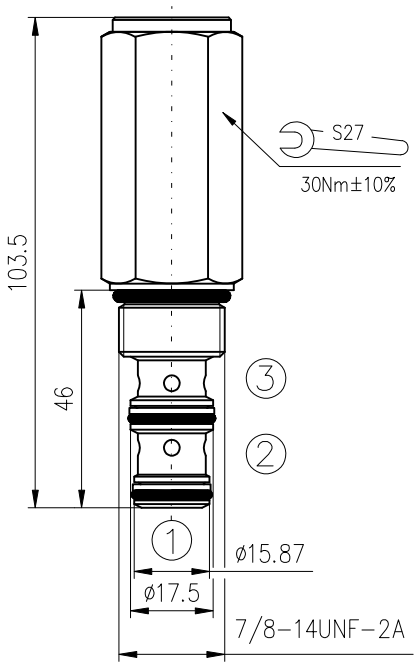

ORDERING CODE

PSV10-3A	...

Pressure sequence valve

Seals: Buna N - N
Viton V - V

TECHNICAL DATA

Operating pressure	200bar
Pressure sequence range:	35...200 bar
Rated flow - See Performance Chart	
Internal leakage 1 to 2:	82cc/minute max. to 85% of nominal setting
Working liquid-hydraulic oils with characteristics: -viscosity -degree of filtration -temperature	 10...400 cSt 0,025 mm -20...+80°C
Cavity: See “Cavities and bodies” broshure	CC10-3